| Item | Aantal | Art.nummer | Part nr. |
|---|---|---|---|
| 1 | 2 | S082EO04500000 | stijl pc082x2,00 S350GD+ZM90 L=04500 |
| 2 | 2 | C4020BO1022000 | c-40x20x13x1,25 S350GD+ZM90 L=1022,0 |
| 3 | 7 | C4020BO1190.8000 | c-40x20x13x1,25 S350GD+ZM90 L=1190,8 |
| 4 | 14 | 96.0325.000 | Inbusbout M10x55 evz (DIN912) |
| 5 | 14 | 96.0094.000 | Zeskantmoer M10 evz [8] (DIN 934) |
| 6 | 2 | 15.0814.064 | montage bus pc082 Ø16x1,5 L=37,5 zink |
| 7 | 2 | 27.0000.060 | voet pc082 130x158x5 e-zink |

Permissible dimensional, shape and weight deviations in accordance with DIN EN 10162 unless otherwise indicated.

F82EO00601100000 - fr. PC082 2,00 350GD+ZM90 L=4500x1100

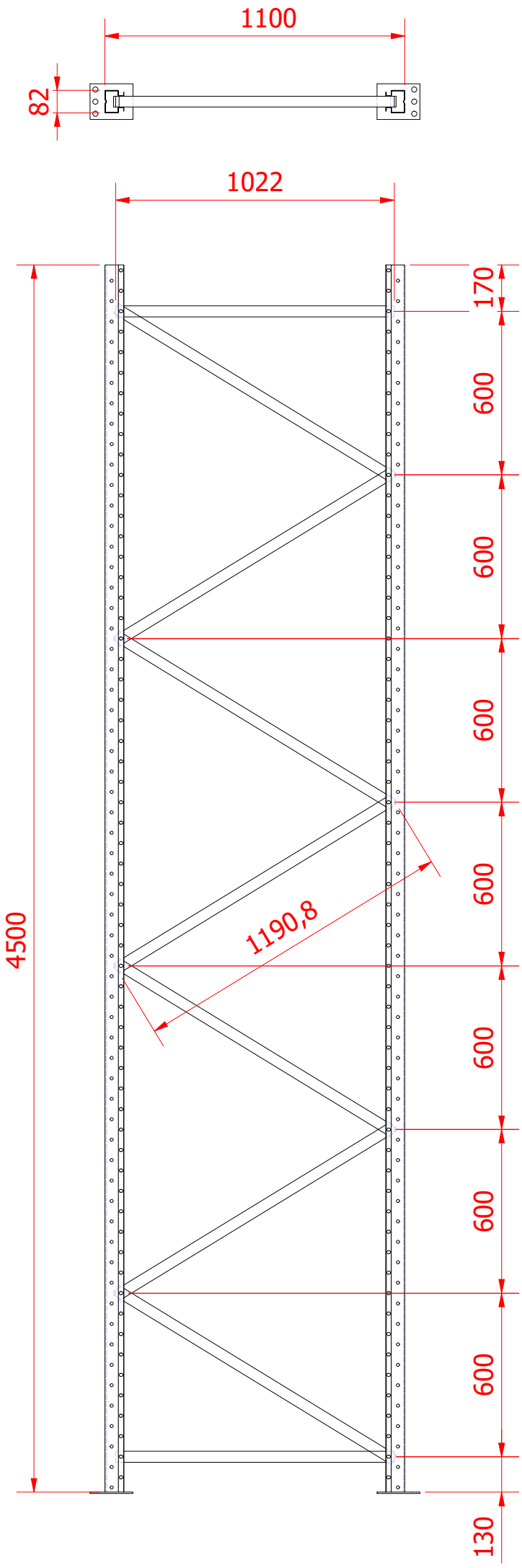

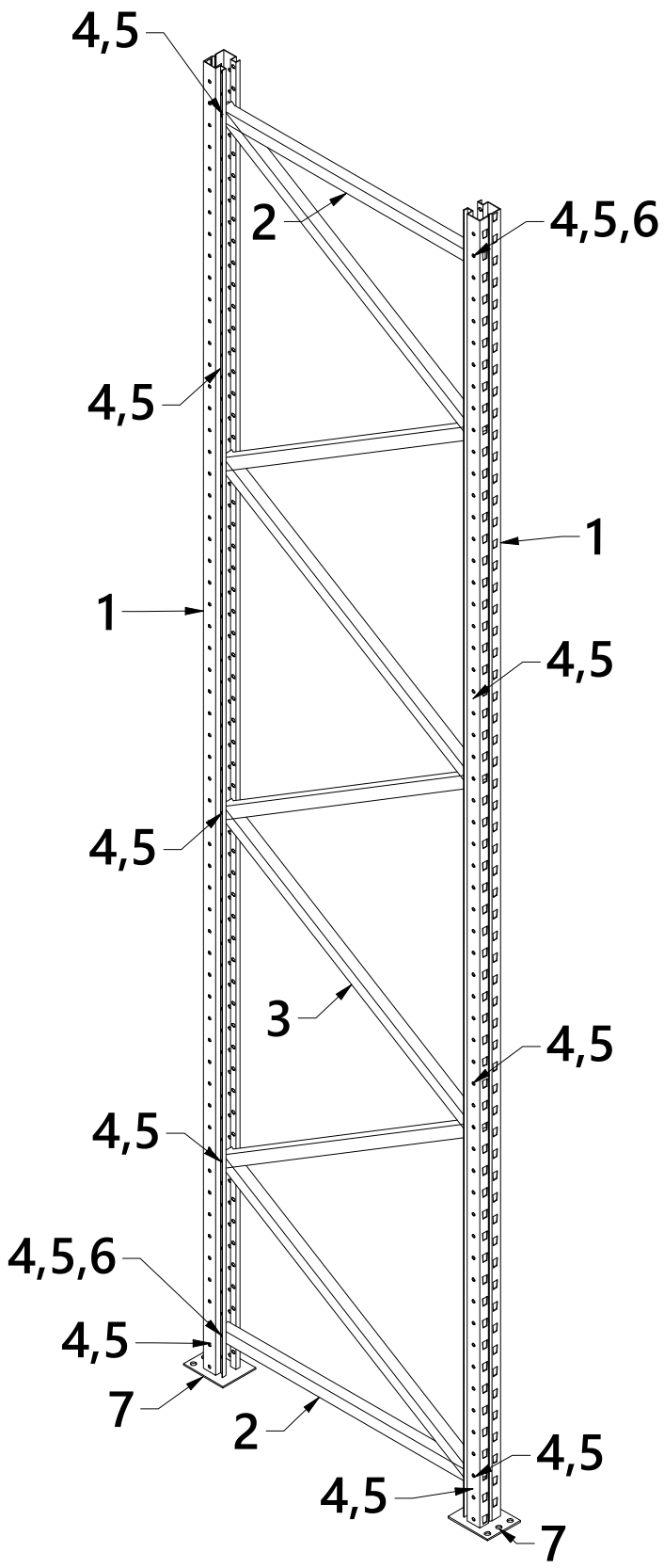


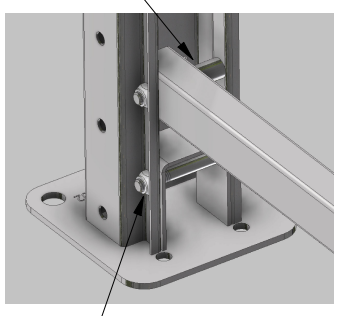


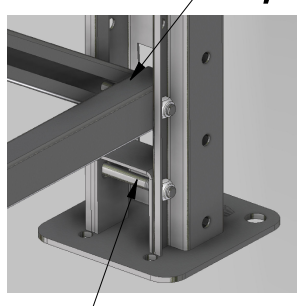



Cor Verkolf

Bezoek:
Ramgatseweg 3
NL 4941 VN
Raamsdonksveer

Contact:
+31 162 514 458
info@corverkolf.nl
www.corverkolf.nl

Overig:
KvK: 18130237
Btw nr: NL801545092B01
Openingstijden: 8:00 > 17:00


Kleur : RAL

Lasmal : -

| | | | | | |
|---|---|---|---|---|---|
| Drawn : ericw | 2-4-2024 | Saved : 2-04-2024 | Size : A3/1 : 20 | Klant : - | American Projection |
| Checked : | | Version : 0 | Sheet : 1/1 | Project : - | |
| Weight : N/A | | | | File : F82EO00601100000 - frame layout.idw | |

Stock number : F82EO00601100000

Part number : fr. PC082 2,00 350GD+ZM90 L=4500x1100


Deze tekening is en blijft eigendom van Cor Verkolf, en mag niet zonder toestemming worden gedupliceerd of gepubliceerd.
This drawing remains the property of Cor Verkolf, and should not be duplicated or published without permission .